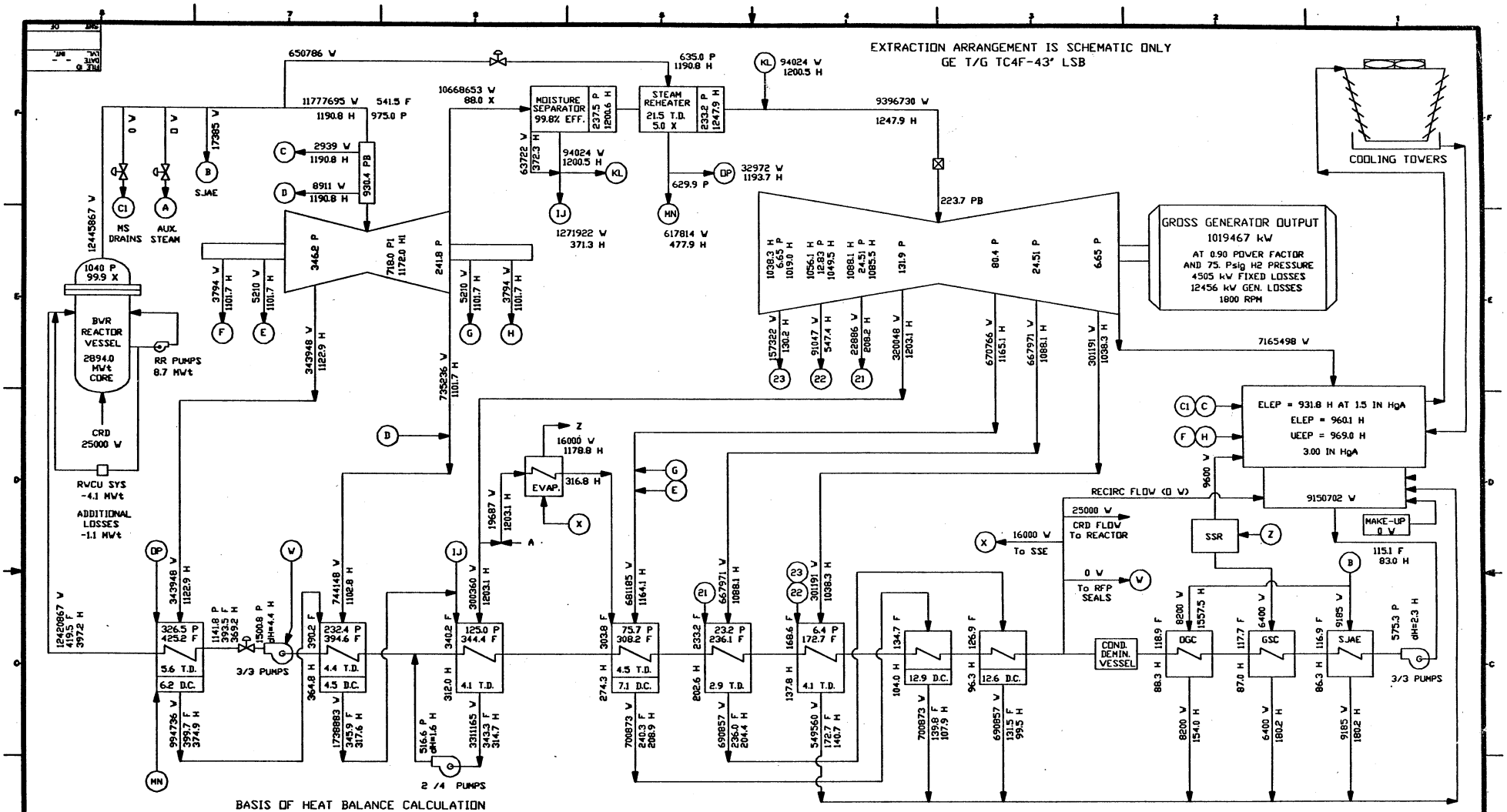

BASIS OF HEAT BALANCE CALCULATION

1. All heat balance results were produced by the PDPSE Computer Program, Version 61, on a personal computer.

2. Turbine-Generator cycle performance based on General Electric Thermal Kit and actual plant operating data.

3. Reactor core power is based on current 100% power level. The net thermal input of the NSSS is based on main steam, feedwater and control rod drive flows and enthalpies, core power, plus reactor recirculation power, less reactor water cleanup system losses of 4.1 MWt, less additional miscellaneous losses of 1.1 MWt.

4. Pressure drops for Main Steam (reactor vessel to throttle valve), Main Steam Supply to Reheater, Extraction Steam Lines to Feedwater Heaters, and Feedwater (RFP control valve to reactor vessel) are calculated from piping and process data at all loads. Pressure drops from high pressure turbine exhaust to low pressure boot (i.e., reheat portion of cycle) and between stage shell pressure and turbine extraction shell flanges are based on GE thermal kit for operated conditions.

5. Feedwater heater terminal temperature differences and drain cooler approach temperatures are based on performance data provided in Specification RBS-227.480-815.

6. Pump performance (i.e., head capacity and efficiency) based on vendor provided pump curves.

7. Auxiliary Power is based on the following major equipment which varies with load

	Electrical Input to Motors	Quantity Operating
Condensate Pumps	4527 kW	2
Heater Drain Forwarding Pumps	8630 kW	2
Reactor Feedpumps	16815 kW	3

and the following auxiliary items which are considered not to vary with load

Reactor Recirculation Pumps	8,273 kW
Circulating Water Pumps	9,614 kW
Cooling Tower Equipment	3,050 kW
Miscellaneous Mechanical Equipment	14,868 kW

8. Circulating water flow is taken as 555,000 gpm. Condenser cleanliness is taken as 85% with no tubes plugged.

9. Calculations are based on 1967 ASME Steam Tables.

$$\text{Gross Turbine Heat Rate} = \frac{\text{HS Flow Rate} \times (\text{HS Enthalpy} - \text{FW Enthalpy}) + \text{CRD Flow Rate} \times (\text{CRD Enthalpy} - \text{FW Enthalpy}) - \text{CRD Enthalpy}\,(3445867 \times (1190.8 - 397.2) + 25000 \times (397.2 - 88.3))}{\text{Gross Generator Output}} = \frac{9696 \text{ Btu/kWh}}{1019467}$$

$$\text{Net Turbine Heat Rate} = \frac{\text{HS Flow Rate} \times (\text{HS Enthalpy} - \text{FW Enthalpy}) + \text{CRD Flow Rate} \times (\text{CRD Enthalpy} - \text{FW Enthalpy}) - \text{CRD Enthalpy}\,(3445867 \times (1190.8 - 397.2) + 25000 \times (397.2 - 88.3))}{\text{Gross Generator Output} - \text{Power to Reactor Feedpump(s)}} = \frac{9859 \text{ Btu/kWh}}{1019467 - 16815}$$

$$\text{Unit Turbine Heat Rate} = \frac{\text{HS Flow Rate} \times (\text{HS Enthalpy} - \text{FW Enthalpy}) + \text{CRD Flow Rate} \times (\text{CRD Enthalpy} - \text{FW Enthalpy}) - \text{CRD Enthalpy}\,(3445867 \times (1190.8 - 397.2) + 25000 \times (397.2 - 88.3))}{\text{Gross Generator Output} - \text{Auxiliary Power Demand}} = \frac{10324 \text{ Btu/kWh}}{1019467 - 61967}$$

COND. PRESS INCHES HgA	GROSS GENERATION kW	UNIT OUTPUT kW	GROSS TURBINE HEAT RATE Btu/kWh	NET TURBINE HEAT RATE Btu/kWh	UNIT HEAT RATE Btu/kWh	CIRCULATING WATER TEMPERATURE INLET, F	CIRCULATING WATER TEMPERATURE OUTLET, F
1.75							
2.00							
2.50							
3.00	1019467	957508	9696	9859	10324	LATER	LATER
3.50							
4.00							

LEGEND

D.C.	Drain Cooler Approach Temperature, Degrees F
T.D.	Terminal Temperature Difference, Degrees F
CLEP	Expansion Line End Point
UEEP	Used Energy End Point
TC4F	Tandem Compound - 4 Flow
LSB	Last Stage Blade Length
kW	Kilowatts
kWt	Megawatts thermal
P, PB	Pressure (psia), Pressure at turbine boot
F	Temperature, Degrees F
V	Flow Rate, lb/hr
H	Enthalpy, Btu/lb
X	Steam Quality, %
HgA	Absolute pressure measured in inches of a mercury column (e.g. condenser vacuum)
RPM	Revolutions per minute
CRD	Control Rod Drive
SSE	Steam Seal Evaporative Boiler
SJAE	Steam Jet Air Ejector
GSC	Gland Steam Condenser
DGC	Off-Gas Condenser
SSR	Steam Seal Regulator
⊠	Throttle or Intercept Valve
	Control Valve

DRAWING REVISION RECORD

REV.	DATE	PREPARED	REVIEWED	APPROVED	PURPOSE	PLAN
0	03/04/97	[illegible]			PRELIMINARY ISSUE	

SCALE NTS
PROJECT NUMBER
DATE
DRAWN

HEAT BALANCE DIAGRAM
CURRENT 100% LOAD
3 IN HgA
CONDENSER PRESSURE
RIVER BEND STATION UNIT 1
WEST FELICIANA PARISH, La
ENTERGY OPERATIONS, INC.

SARGENT & LUNDY
CHICAGO

DWG. NO. -RB3 REV. 0
SHEET 1 OF 1